Customer approval :

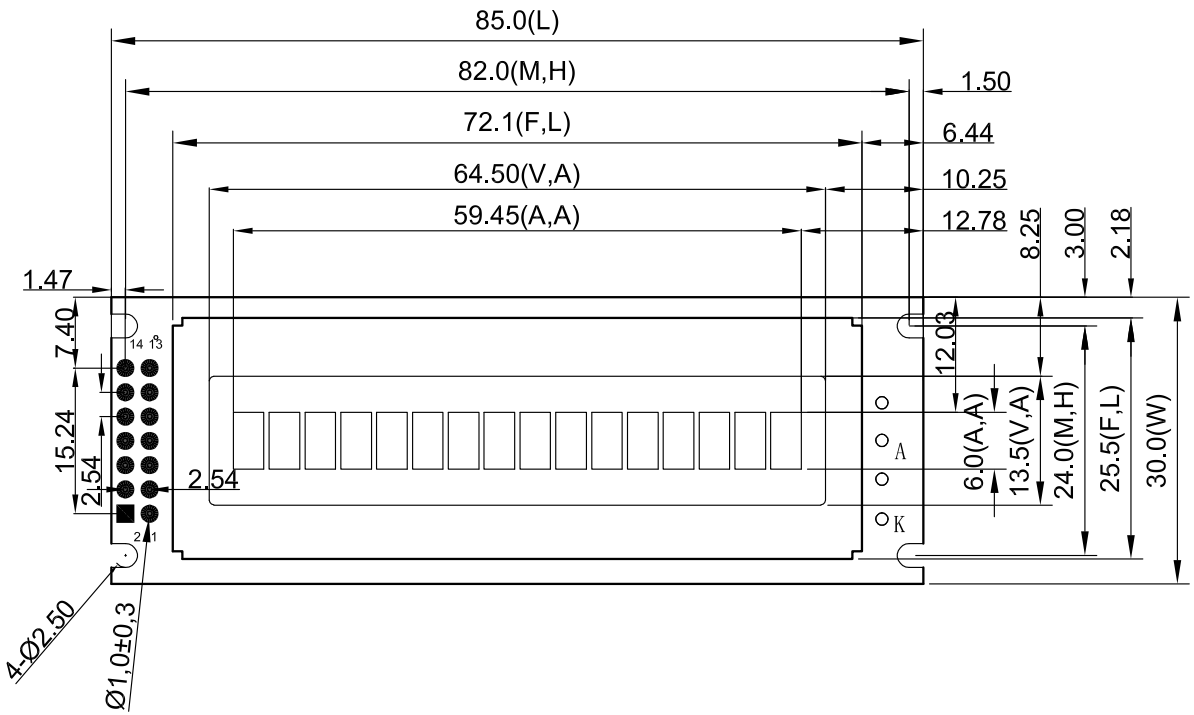

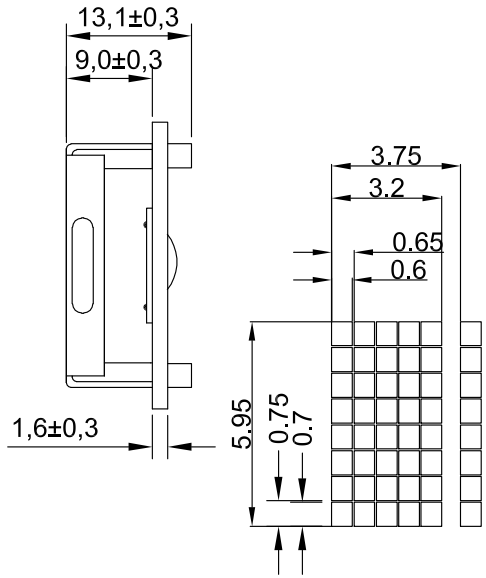

SPECIFICATION:

1). Driving: Duty:1/16, Bias:1/5, Vdd:5.0V, Vlcd:4.0V

2). VIEWING DIRECTION: 6 O'CLOCK

3). Display mode: STN/B-W/Positive/Transmissive

4). Operating temp.:0°C~+50°C

5). Storage temp.: -10°C~+60°C

6). Control IC: SPLC780D1(Or Compatible)

7). BACKLIGHT: Array,White

8). DIMENSIONS WITH MARK "*" ARE IMPORTANT WITH MARK "()" ARE REFERENCED

9). All the raw materials are RoHS compliant

1	2	3	4	5	6	7	8	9	10	11	12	13	14	15	16
VSS	VDD	Vo	RS	R/W	E	DB0	DB1	DB2	DB3	DB4	DB5	DB6	DB7	BLA	BLK

REV	REVISION RECORD	DATE
A0	First issue	11/15

TCC®

深圳市三元晶科技有限公司
ShenZhen TCC LCD Hi-Tech Co,. Ltd

MODEL NO.	SYB1601CV10-5C10K1L		GENERAL TOL: ± 0.3
APPROVED BY	CHECKED BY	DRAWING BY	PAGE: 1 OF 1 / UNIT: mm
	Francis 2012/11/15	Francis 2012/11/15	PROJECTION